24kV, 250A Deadbreak Elbow Connector with cable adapter & jacket seal

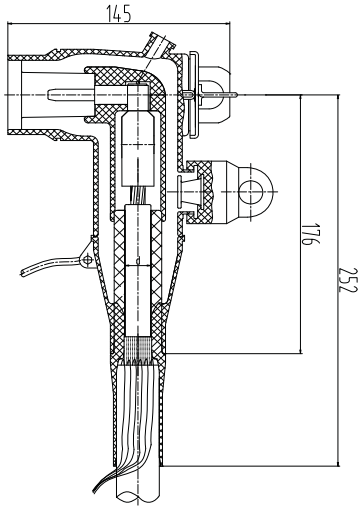

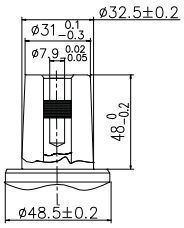

Bushing Interface Dimensions
(1) ANSI/IEEE std. 386-1995 figure 4
(2) DIN std. 47636-1986
(3) EN 50180 & 50181 interface A

Material :
EPDM or Silicon

Model Number:

CEE KZT-24/250-J-X-X-XX

B: Bimetal Lug
Blank: Copper Lug

Cable Adapter Code	Cable Adapter Size	Cable Insulation Range		Conductor Cross Section mm^2		
		Inches	mm	6/10(12) kV	8.7/15(17.5) kV	12/20(24) kV
A	Size A	.53~.65	13.5~16.5	25,35,50	25	
B	Size B	.61~.73	15.5~18.5	50,70	35,50	25
C	Size C	.71~.83	18.0~21.0	95	70	35
D	Size D	.79~.91	20.0~23.0	120	95	50,70
E	Size E	.87~.98	22.0~25.0	150	120	95
F	Size F	.95~1.06	24.0~27.0	185	150	120

Rating:

Per or exceed IEC 60502-4:1997
24kV Voltage Class (12kV Max phase-to – ground)
125kV BIL and Full Wave Crest – Impulse Withstand
54kV AC - 5 Minutes Withstand
Partial Discharge : ⩽10pc@20kV
250 Amp - Continuous

KEMA