E-mail : info@aelocks.in // Website : www.aelocks.in

LG002-2

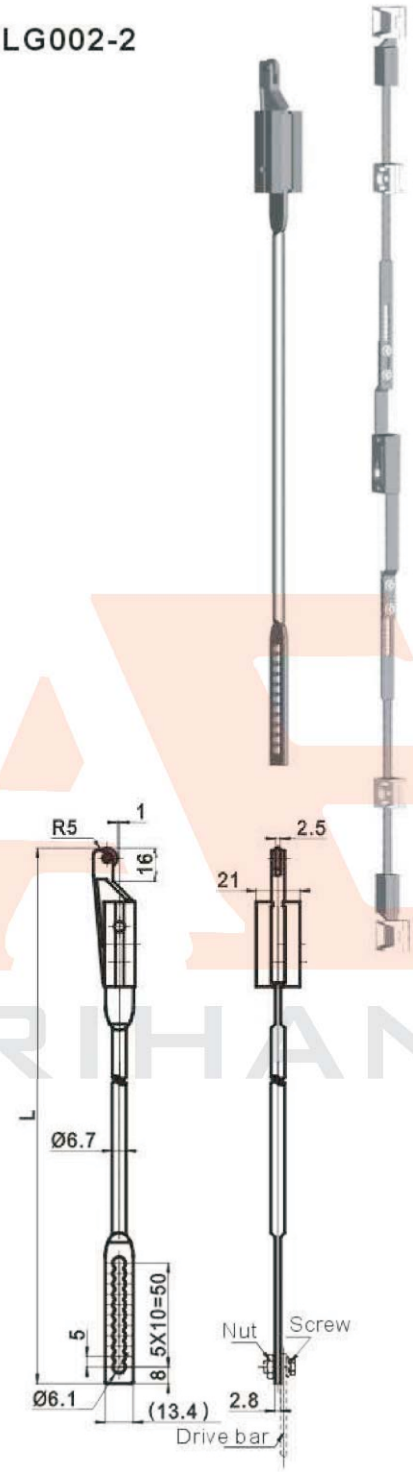

Remarks: fix flat bar with screw. rod length is adjustable, 5mm is adjusted by changing one set hole.

Zinc plated steel, adjustable round rod. ZDC joint, outside the gasketing.

LG002-2-1100	1100
LG002-2-1000	1000
LG002-2-900	900
LG002-2-800	800
LG002-2-700	700
LG002-2-600	600
LG002-2-500	500
ROD CODE	L